UNIVERSITY OF CAMBRIDGE INTERNATIONAL EXAMINATIONS
General Certificate of Education Advanced Level

CANDIDATE NAME

CENTRE NUMBER | | | | | |

CANDIDATE NUMBER | | | | |

6486804731

PHYSICS **9702/51**

Paper 5 Planning, Analysis and Evaluation **October/November 2013**

1 hour 15 minutes

Candidates answer on the Question Paper.

No Additional Materials are required.

READ THESE INSTRUCTIONS FIRST

Write your Centre number, candidate number and name on all the work you hand in.
Write in dark blue or black pen.
You may use a pencil for any diagrams, graphs or rough working.
Do not use staples, paper clips, highlighters, glue or correction fluid.
DO **NOT** WRITE IN ANY BARCODES.

Answer **all** questions.

Electronic calculators may be used.
You may lose marks if you do not show your working or if you do not use appropriate units.

At the end of the examination, fasten all your work securely together.
The number of marks is given in brackets [ ] at the end of each question or part question.

This document consists of **8** printed pages.

© UCLES 2013

UNIVERSITY of CAMBRIDGE International Examinations

1 An aluminium ring is placed on a coil with the rod of a metal retort stand passing through their centres, as shown in Fig. 1.1.

For Examiner's Use

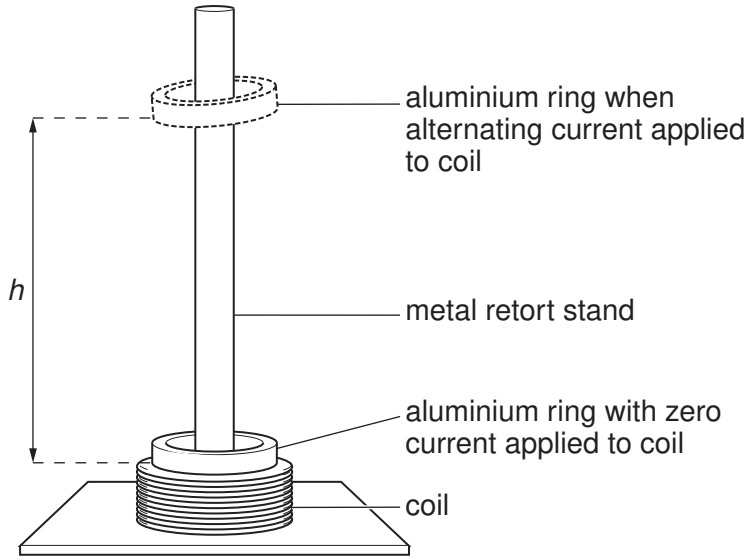

Fig. 1.1

When an alternating current of frequency f is applied to the coil, the ring rises until it is in equilibrium at a height h above the coil.

It is suggested that the relationship between h and f is

$$h = kf^n$$

where k and n are constants.

Design a laboratory experiment to test the relationship between h and f and determine values for k and n. You should draw a diagram, on page 3, showing the arrangement of your equipment. In your account you should pay particular attention to

(a) the procedure to be followed,

(b) the measurements to be taken,

(c) the control of variables,

(d) the analysis of the data,

(e) the safety precautions to be taken.

[15]

© UCLES 2013

Diagram

For Examiner's Use

.....

.....

.....

.....

.....

.....

.....

.....

.....

.....

.....

.....

.....

.....

For Examiner's Use

For Examiner's Use	Defining the problem	Methods of data collection	Method of analysis	Safety considerations	Additional detail

© UCLES 2013

2 A student is investigating resonance of the air column in a tube using the apparatus shown in Fig. 2.1.

For Examiner's Use

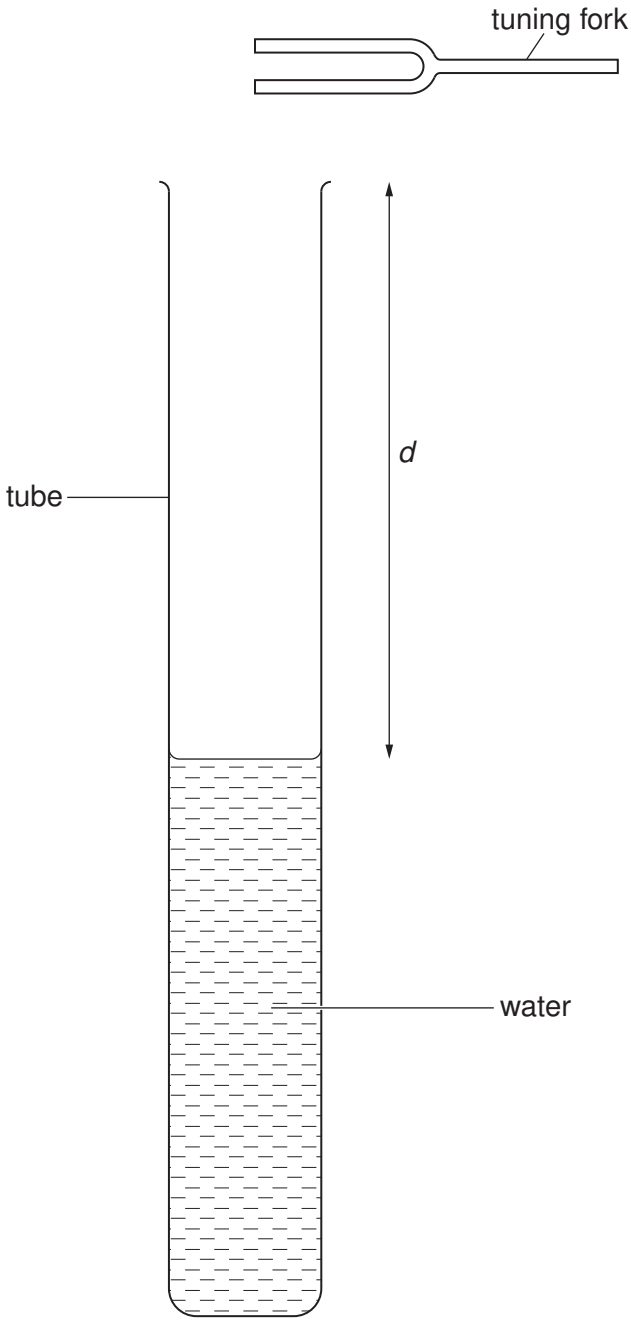

Fig. 2.1

For different tuning forks, the water level is adjusted until resonance occurs. For each tuning fork, the frequency *f* and distance *d* are recorded.

Question 2 continues on the next page.

For Examiner's Use

It is suggested that f and d are related by the equation

$$4(d + k) = \frac{v}{f}$$

where v is the speed of sound in air and k is a constant.

(a) A graph is plotted of d on the y-axis against $\frac{1}{f}$ on the x-axis. Determine expressions for the gradient and y-intercept in terms of k and v.

gradient = ...

y-intercept = ... [1]

(b) Values of f and d are given in Fig. 2.2.

f/Hz	d/cm	
320	24.5 ± 0.5	
340	23.0 ± 0.5	
378	20.5 ± 0.5	
428	18.0 ± 0.5	
480	16.0 ± 0.5	
512	15.0 ± 0.5	

Fig. 2.2

Calculate and record values of $\frac{1}{f}/10^{-3}$ s in Fig. 2.2. [2]

(c) **(i)** Plot a graph of d/cm against $\frac{1}{f}/10^{-3}$ s. Include error bars for d. [2]

(ii) Draw the straight line of best fit and a worst acceptable straight line on your graph. Both lines should be clearly labelled. [2]

(iii) Determine the gradient of the line of best fit. Include the uncertainty in your answer.

gradient = ... [2]

© UCLES 2013

For Examiner's Use

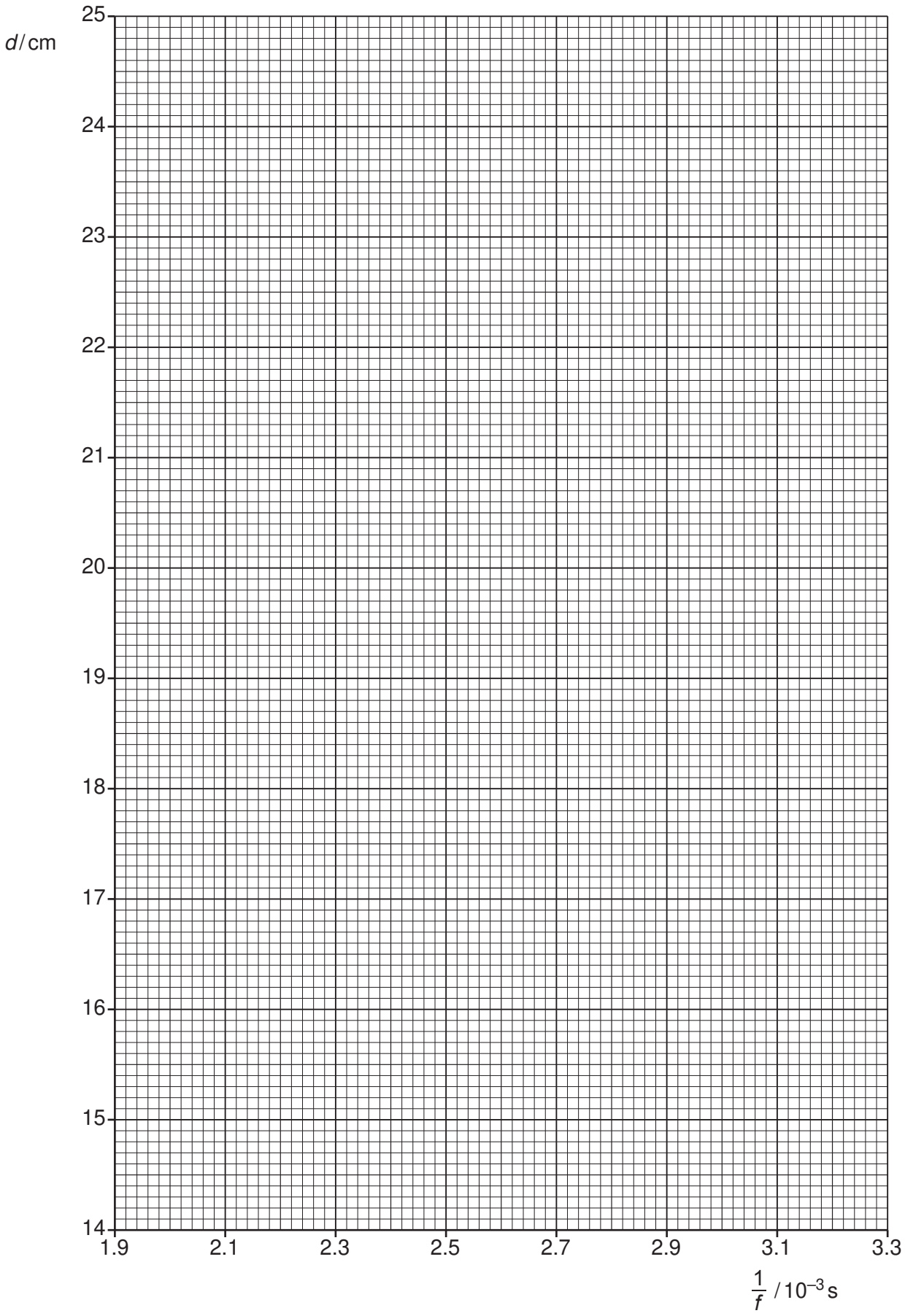

(iv) Determine the *y*-intercept of the line of best fit. Include the uncertainty in your answer.

For Examiner's Use

y-intercept = ... [2]

(d) Using your answers to **(c)(iii)** and **(c)(iv)**, determine values for *k* and *v*. Include appropriate units in your answers. Include the absolute uncertainties in *k* and *v*.

k = ...

v = ...
[2]

(e) **(i)** The experiment is repeated with a tuning fork of unknown frequency. The distance *d* is measured as 31.0 ± 0.5 cm. Determine the frequency of the tuning fork.

f = ...Hz [1]

(ii) Determine the percentage uncertainty in your value of *f*.

percentage uncertainty = ...% [1]

Permission to reproduce items where third-party owned material protected by copyright is included has been sought and cleared where possible. Every reasonable effort has been made by the publisher (UCLES) to trace copyright holders, but if any items requiring clearance have unwittingly been included, the publisher will be pleased to make amends at the earliest possible opportunity.

University of Cambridge International Examinations is part of the Cambridge Assessment Group. Cambridge Assessment is the brand name of University of Cambridge Local Examinations Syndicate (UCLES), which is itself a department of the University of Cambridge.